(1) DIMENSIONS AND ACCESSORIES

1-1 Main Dimensions

HOMACH KM-1800C

Swing over bed	17"
Swing over cross slide	9-3/8"
Swing in gap	24-3/4"
Max. distance between centers	48"
Length of bed, overall	84½"
Width of bed, on slide face	13-1/16"
Center height from floor	45"
Spindle speeds	C Type 16 steps 12-1500 r.p.m.
Dia. of hole through spindle	2"
Size of taper hole in spindle	Morse Taper No.6
Size of taper hole in tailstock barrel	Morse Taper No.4
Feeds per rev. of spindle	36 steps 0.002" - 0.31"
Threading capacity, inch system	31 - 46 threads/inch
Motor power	7.5 HP

1-2 Accessories

Driving plate	1	Pedal control brake	1
Face plate	1	Follow rest	1
Spindle sleeve(M.T. No.6xNo.4)	1	Steady rest	1
Centers (M.T. No.4)	2	Spanner & wrenches	1
Threading dial	1	Electric equipments	1
Slipping clutch	1	Coolant pump & pipings	1
American Rocker type tool post	1	Micrometer stop	1
		Change gears for D.P. threading	1

C-3

(2) MACHINE FOUNDATION

2-1 Foundation Works

The foundation area should be taken amply include even the opening space of side cover, ejecting space of chips, etc. The foundation area of Lathe and positions of level adjust screws are descrived on "Foundation Drawing".

Foundation Drawing

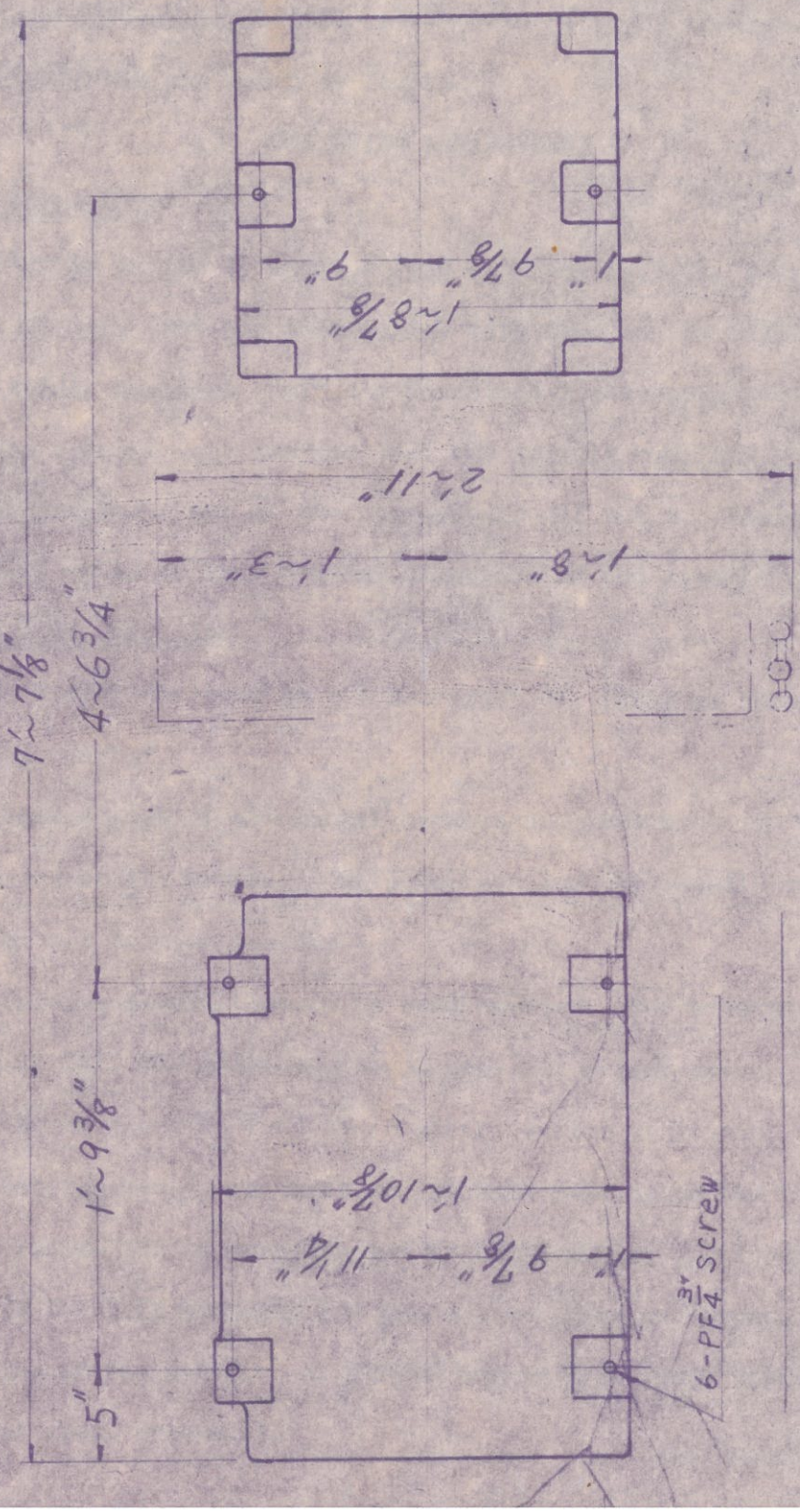

The concrete base for the foundation should be as deeper as possible over 12" at least, and reinforced by stake driving if possible.

For keeping of the accuracy, it is necessary to make concrete base securely and to take Lathe level precisely. For taking of the level, special care must be made at cross direction level, so that the twist of the bed is caused by its insufficient levelling. After set-up the Lathe on concrete base, re-check the level once per month at least.

(3) OPERATING ARRANGEMENT

3-1 Electric connection

Connect the electric sourse to machine lead wire end (R.T.O), seen from back side of left leg. Set the main switch with fuse at the middle of the wire line for safety caution. Take earth against leakage. Check the rotating direction of the spindle, and comfirm that the spindle revolves in counter-clockwisely looked from front of the head-stock. If not so, change wire connection by R.T.O. so as to take regular direction of the spindle rotation.

3-2 Process before operation

(a) Fill up the fresh lubricant in all necessary oil parts as shown on "Lubrication charts".

(b) Check the hand action of all manual handles and levers.

(c) Set the levers on its neutral positions, confirm the spindle rotation in smooth or not by hand feeling.

(d) Check the driving V-belt tention by hand pushing. For adjustment of V-belt, rise or fall the motor by hinged base and adjust nuts.

"CAUTION" It is necessary to take the regular tension of driving V-belt. If too tightenly, it comes unjust heat raising on the bearings and reduse the accuracy caused by overloading. If too loosen, raise the belt slipping and can not get regular torgue.

(e) When starting of the spindle, at first, begine from lower speeds and increase the speed gradually.

3-3 Lubrication charts

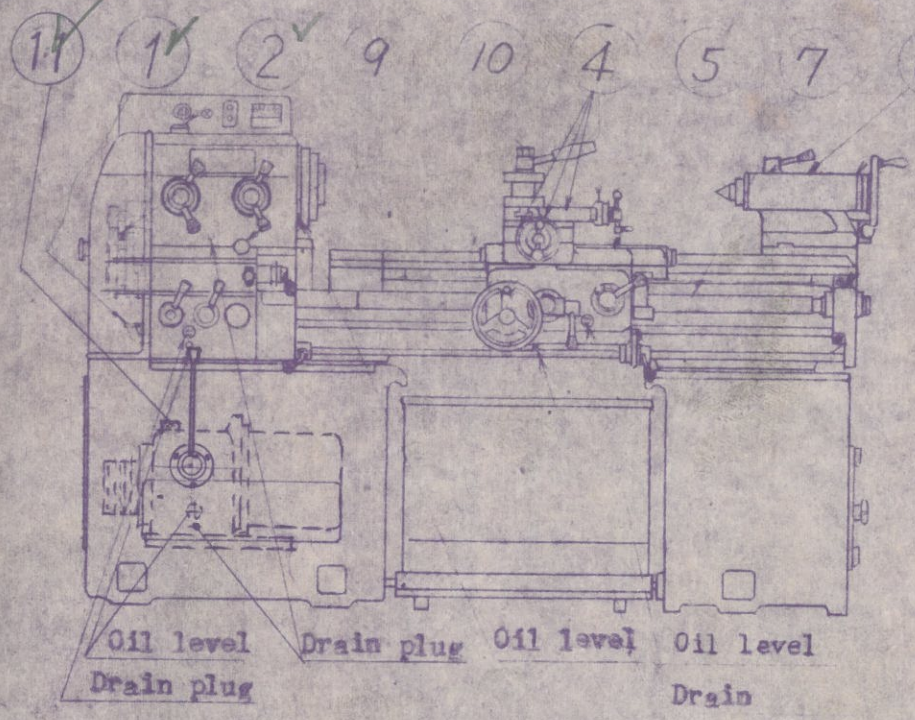

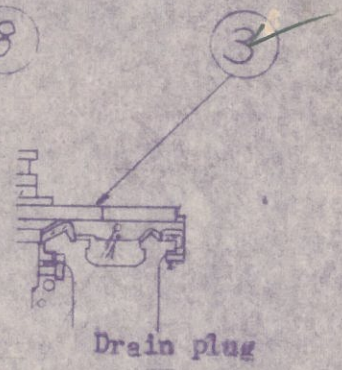

Side view of Cross Slide

Oil position	Oil parts	Schedule	Oil quality			Capacity of reservoir
			SHELL	CALTEX	ESSO	
1	Feed Gear Box	Exchange per 6 months	Tellus oil 27	Regal B (R & O)	Teresso 43	0.3 gallon
2	Head-stock Rando H.D. 32 TexACO	Ditto	Ditto	Ditto	Ditto	2.5 gallon
3	Bed Slide ways	Check level	Tellus oil 33	Regal C (R & O)	Teresso 52	0.1 gallon
4	Parts of Toolrest and Tool slide	3 times/day	Ditto	Ditto	Ditto	By oiler
5	Apron	Exchange per 6 months	Tellus oil 27	Regal B (R & O)	Teresso 43	0.3 gallon
6	Parts of Tail-stock	3 times per day	Tellus oil 33	Regal C (R & O)	Teresso 52	By oiler
7	Leal-screw	Ditto	Ditto	Ditto	Ditto	By oiler
8	End Bracket	Ditto	Ditto	Ditto	Ditto	By oiler
9	Middle Shaft of change gears	Ditto	Ditto	Ditto	Ditto	By oiler
10	Upper parts of feed gear box	Ditto	Ditto	Ditto	Ditto	By oiler
11	Speed Change Gear Box in Leg	Exchange every 6 months	Tellus Oil 27	Regal B (R & O)	Teresso 43	0.4 gal.

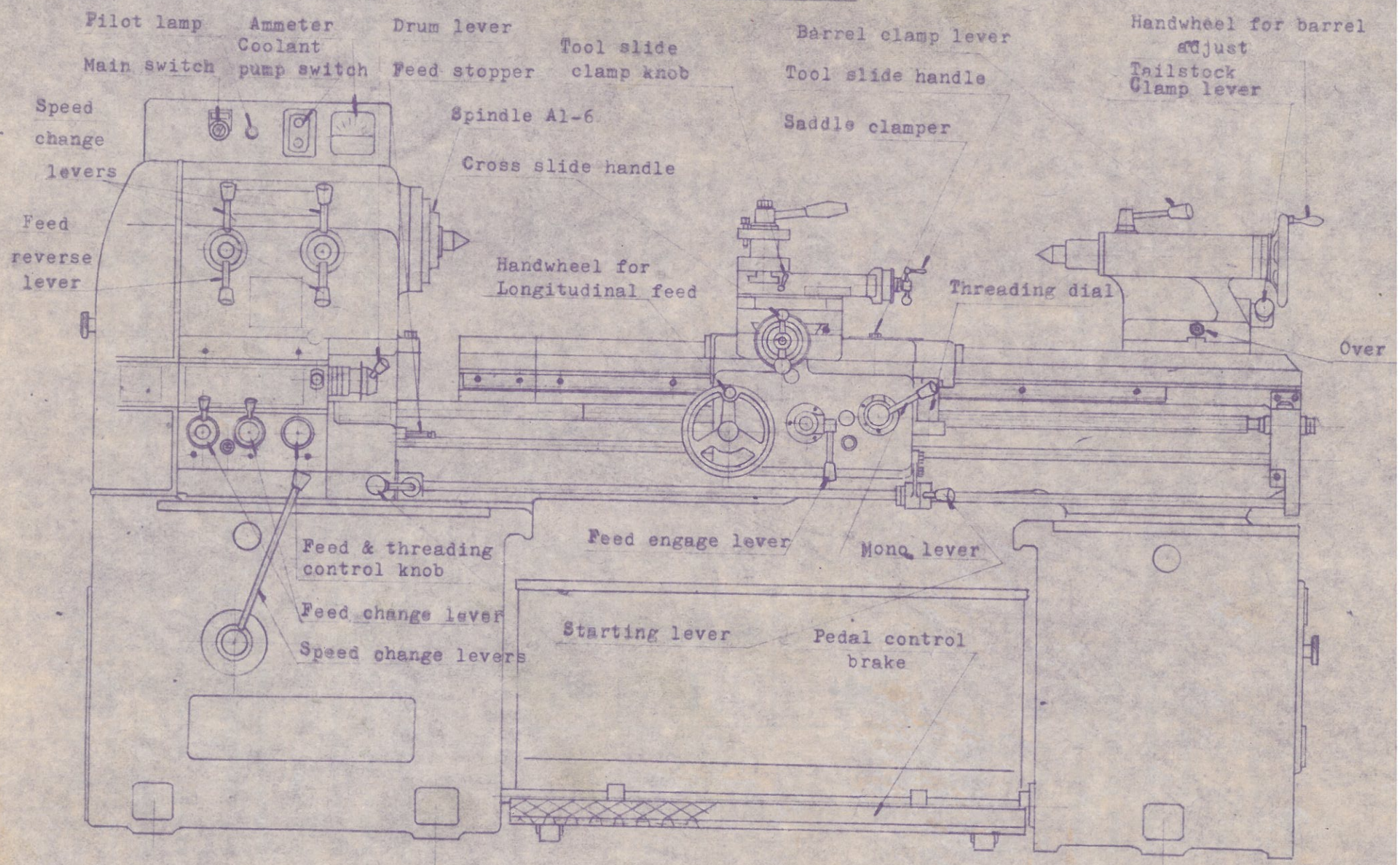
Pilot lamp
Ammeter
Drum lever
Main switch
Coolant pump switch
Feed stopper
Tool slide clamp knob
Barrel clamp lever
Tool slide handle
Handwheel for barrel adjust
Tailstock Clamp lever
Speed change levers
Spindle A1-6
Saddle clamper
Cross slide handle
Feed reverse lever
Handwheel for Longitudinal feed
Threading dial
Over
Feed & threading control knob
Feed engage lever
Mono lever
Feed change lever
Starting lever
Pedal control brake
Speed change levers

5-1 Spindle starting

The spindle can be started, stopped and reversed by either starting levers arranged one on right side of the feed gear box and other one on the right side of the apron.

5-2 Selection of spindle speed

Number of the spindle revolutions are selected by the 3 levers provided on the front of the head-stock (operated only in case of spindle stop)and by the 2-step Speed Change Lever on the front of left side leg.
Number of the spindle revolutions are indicated on "Speed Table", provided on the head-stock, as shown on next figure.

−		12	19	30	47
		60	95	150	235
+		75	120	190	300
		375	600	950	1500

5-3 Cutting feed

There are 2 levers and one knob on the front of the quick change gear box, the knob controls feed and threading, and 2 levers are used for fraction change (2/1, 1/1, 1/2, 1/4). The drum lever on the upper is used for positioning of the tumbler gears as follows; -- in case of axial sliding of the drum by its lever to numbered line (numbers 1-9), the necessary position of the tumbler gear is got, and next, by turning of the drum on that position, the tumbler gear is meshed by spring pin, arranged on the front of the gear box. 36 steps of feeds and 3-46 T.P.I. threading are arranged, as shown on following page.

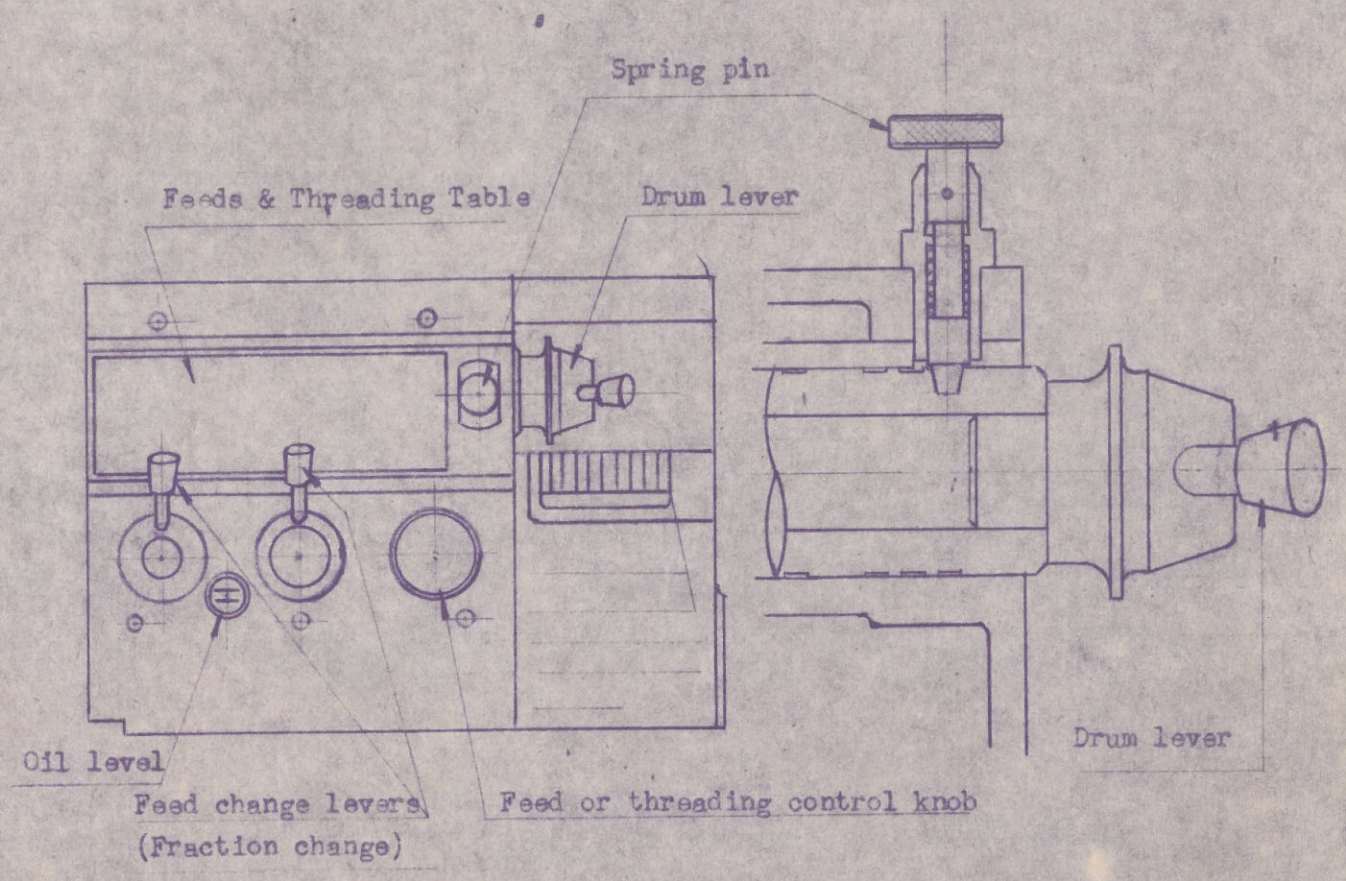

5-4 Handling of apron

Push back the mono-lever on the apron until interior end of T-slot, the saddle is taken in longitudinal feed, and pull up the feed engage lever the feed is engaged by means of cone clutch in the feed driving worm wheel. For the feed stop, push down the feed engage lever.

When to engage the cross feed, take the mono-lever to front end of T-slot, then operate the feed engage lever, as same manner. After long time using of the Lathe, if the defacement of the cone clutch is occured, take off the end cover and tighten the adjust nut slightly. Then the clearance between the cone and worm wheel can be adjusted. After these adjustment is done, lock the adjust nut by locking washer, and re-set the end cover.

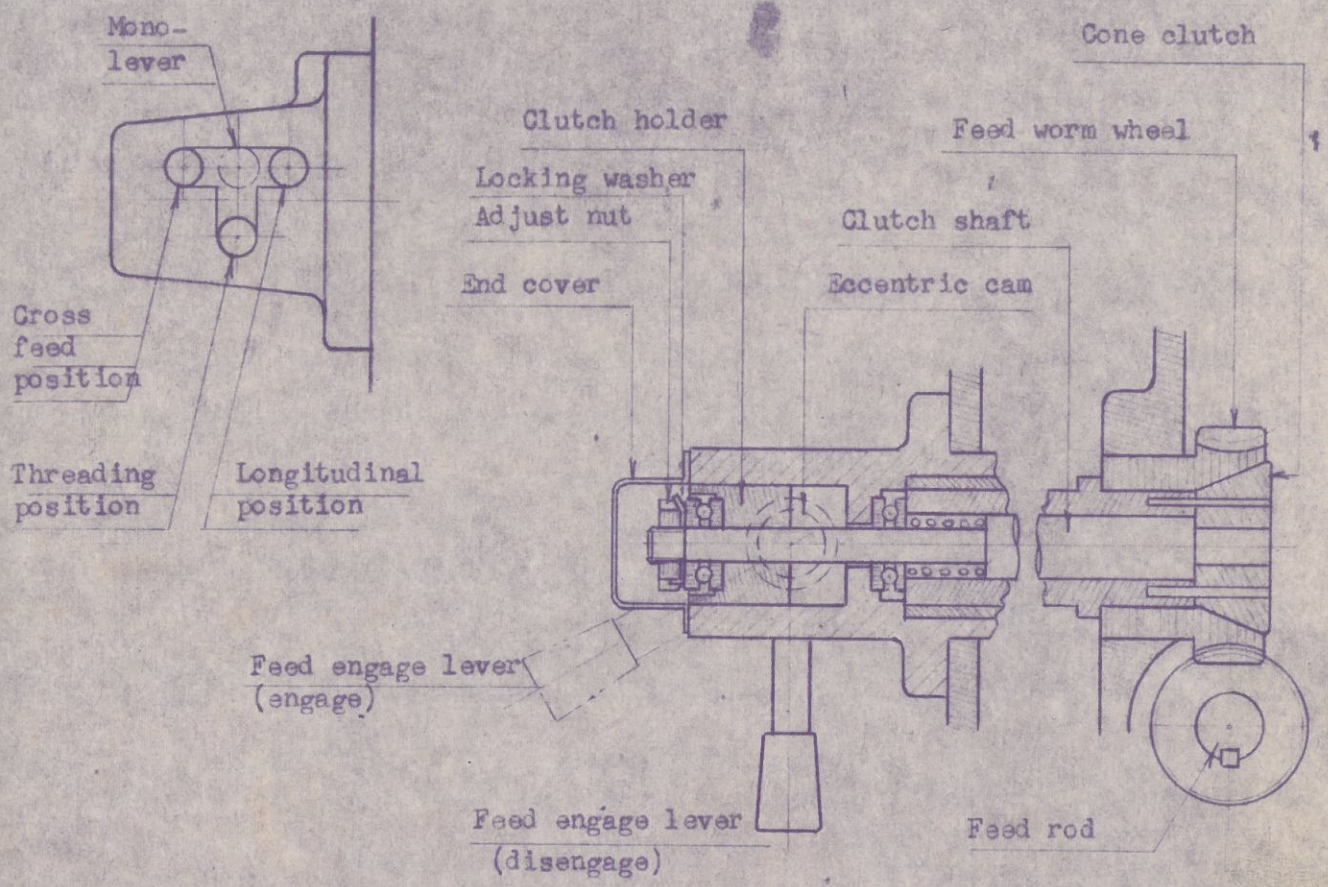

5-5 Threading process

For threading, take the feed levers and knob on its necessary position reffering the "Threading table", then turn the feed reverse lever on the front face of the head-stock, according to right-hand or left-hand threading. Then take the threading control knob on its position, the lead-screw begines the revolution, and next, turn down the mono-lever from middle position of T-slot, the half-nut engage and necessary threading can be done.

Note: The mono-lever controls 3 operations — longitudinal feed, cross feed and threading feed, but these operations can not be engaged at a time.

5-6 Hand feed

The longitudinal and cross hand feeds can be operated by the hand-wheel on left side of the apron and a ballcrank handle provided on the front of the saddle respectively. The tool-slide is adjusted by the ballcrank handle. When these handles are turned clockwisely, the cross-slide and the tool-

5-7 Handling of tail-stock

For clamping of the tail-stock and its barrel, each clamp levers are provided, respectively, and especially for tail-stock, positive clamp can be done. The barrel has large diameter and is adjustable axially by the hand-wheel. The tail-stock body can be slightly shifted cross-wisely by means of adjustable nuts arranged on the front and back face of the tail-stock, and taper turning or correcting of center alignment is done with its treatment by each other.

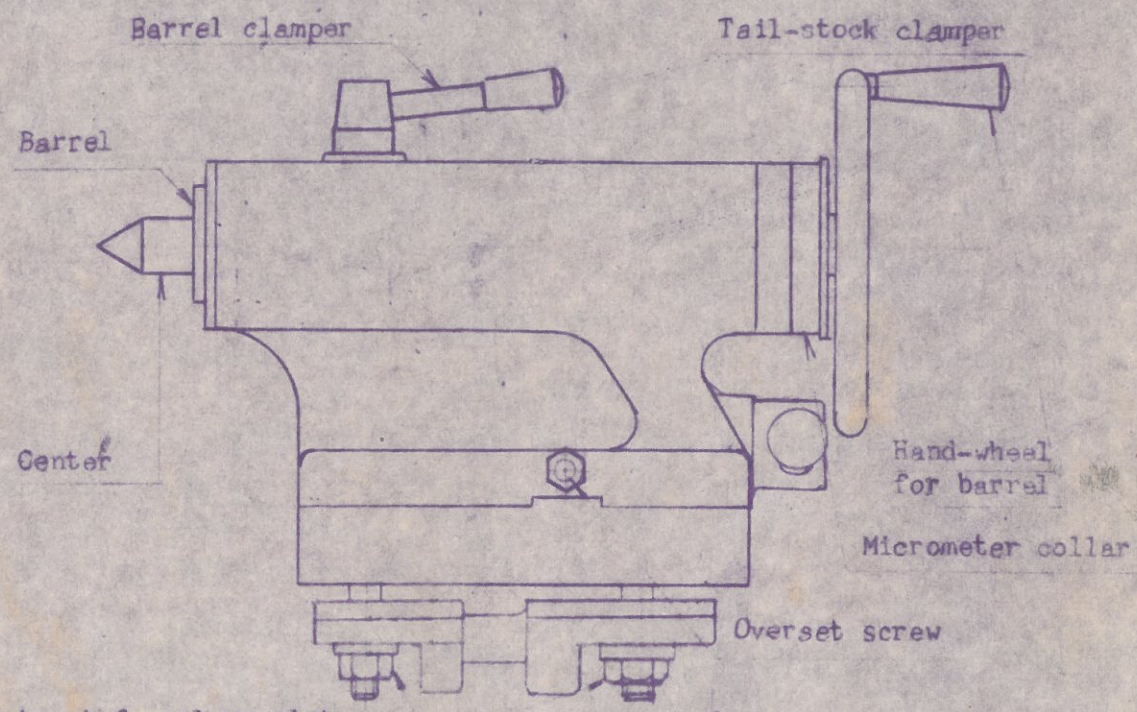

5-8 American Rocker Type Tool Post

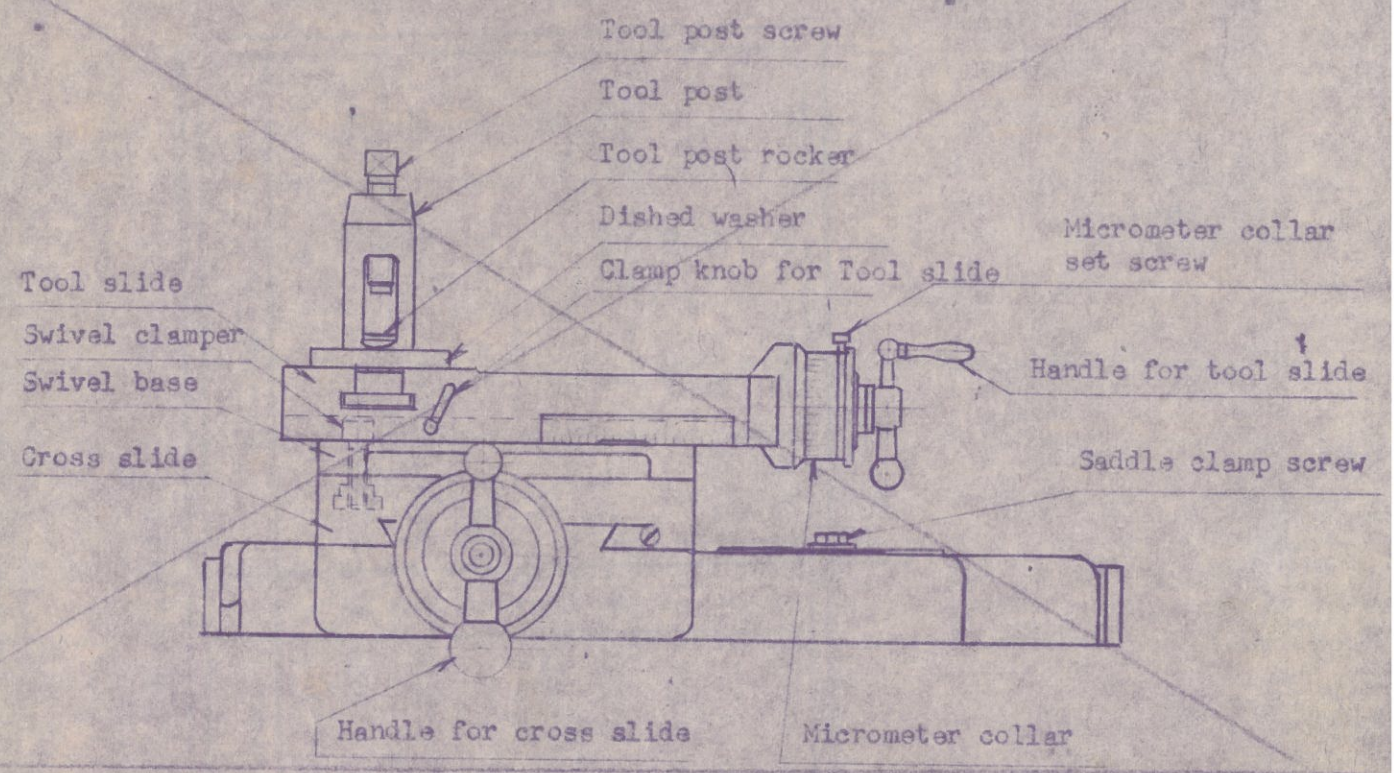

5-9 4 position Turret Rest

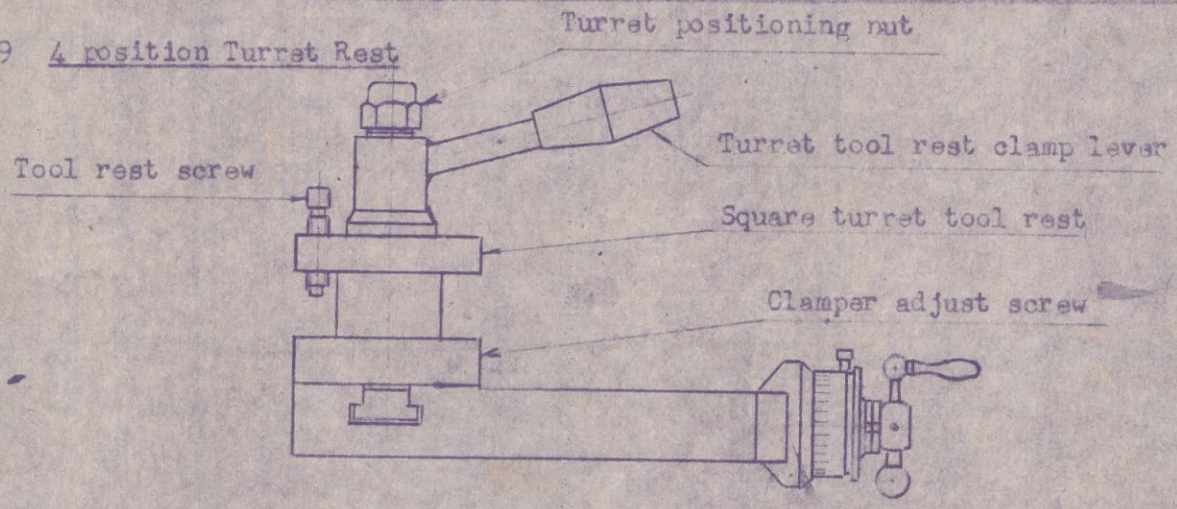

On the tool slide, T-slot is provided and the American Rocker type tool post or 4 position turret tool rest is assembled.

The rocker type tool post is clamped together tool, rocker and dished washer with the tool post screw.

When using 4 position turret tool rest, the turret tool rest is positioned in the T-slot by the positioning hex. nut, and the turret tool rest can be easily turned by loosening of the clamp lever, and the self adjusting cam is actuated in 4 positions and clamped by the tool rest clamp lever.

FEEDS AND THREADING TABLE

(Pitch of lead-screw is 4 T.P.I.)

Longitudinal feeds, inch/rev.				Cross-feeds, inch/rev.				Drum position	Threading T.P.I.			
0.031	0.016	0.0079	0.0039	0.020	0.010	0.0050	0.0025	1	3	6	12	24
0.029	0.015	0.0073	0.0036	0.018	0.009	0.0046	0.0023	2	3-1/4	6-1/2	13	26
0.028	0.014	0.0070	0.0035	0.018	0.009	0.0044	0.0022	3	3--3/8	6-3/4	13-1/2	27
0.027	0.013	0.0067	0.0034	0.017	0.009	0.0043	0.0021	4	3-1/2	7	14	28
0.024	0.012	0.0059	0.0029	0.015	0.008	0.0038	0.0019	5	4	8	16	32
0.021	0.010	0.0052	0.0026	0.013	0.007	0.0033	0.0016	6	4-1/2	9	18	36
0.019	0.009	0.0047	0.0024	0.012	0.006	0.0030	0.0015	7	5	10	20	40
0.017	0.009	0.0043	0.0021	0.011	0.005	0.0027	0.0014	8	5-1/2	11	22	44
0.016	0.008	0.0041	0.0020	0.010	0.005	0.0026	0.0013	9	5-3/4	11-1/2	23	46

Diametral Pitch Threading

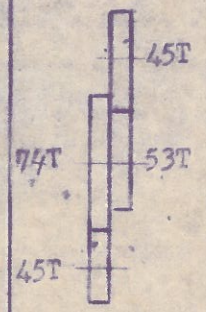

①	6	12	24	48
②		13	26	
③				
④	7	14		
⑤	8	16	32	
⑥	9	18		
⑦	10	20		
⑧	11	22		
⑨				92

1"/4

TAPER ATTACHMENT:

(A) Specification: a. Diametre of available tapering ---- 200mm.
b. Length of available tapering ---- 300mm.
c. Langh of taper, less than ± 10°

(B) Installation: (Refer to illustration)

(1) Fix the Attachment positioning base(17) on the Bed with 6 Cap screws.

(2) Set the Attachment slide(12) on the "T" slot and fix with the Clamp screw(13). Fix the Dial indicator on the Cross slide. Put the measuring instrument on the Attachment slide(12). Then move each other Cross slide and Saddle. Check the parallel of longitudinal and Cross feed. If any, inserting a piece of things , etc.-- between them and confirm their precision. The reading of dial indicator is less than 0.0008 inch.

(3) Change the Carriage shoe(11), and tighten the Locknut washers.

(4) Fix one by one, the Connecting plate(6), T - Bolt(4), Nut(5), Taper attchment shoe --(7), Swivel slide(18), Adjusting knob(15), Sarew(14),.

(5) Lubricate the machine oil to the marking " Oil ".

(C) Operation:

(1) Loosen the Clamp screw(13), move the Taper to the available point by sliding Attachment slide(12).

(2) Setting of the Taper angle: Loosen 2 Screws(14), adjusting the Swivel slide(18), and it can be done by the adjusting handle.

Notice: The Graduation of dial plate, this is just only the aim, therefore in case of precise tapering it should be tried the test tapering.

(3) Less Backlash of each parts : a. Backlash of cross slide screws, in this case loosen slightly the Cap screw(3), and tighten the Screw(2) then tighten firmly Screw(3) after adjusting.
Thrust bearing of Cross slide:
Tighten The Bearing nut(10) and bent the Washer clich.
Backlash of Taper attachment shoe(7):
Tighten 3 Set screws(8) and moving the Saddle and adjust the setting not so hard, and lock with nut finally.

(4) After finished the above all preparations: Loosen the Nuts(5) turn the Cross slide handle, set the measure of diametre, and tighten the Nuts(5), engage the longitudinal feed, the tapering can be worked. In case of Re-Cutting, loosen the Nuts(5), Tighten the Nuts(5) in Tapering.

(5) Ordinary Turning:
Meet the Swivel slide(18) to the "0" of dial or seperate the Taper attachment shoe(7) and the carriage shoe (11).
It will be able to take out easily after thru the Swivel slide(18).
Fix the Thrust block to the Saddle with 2 Screws.(9).

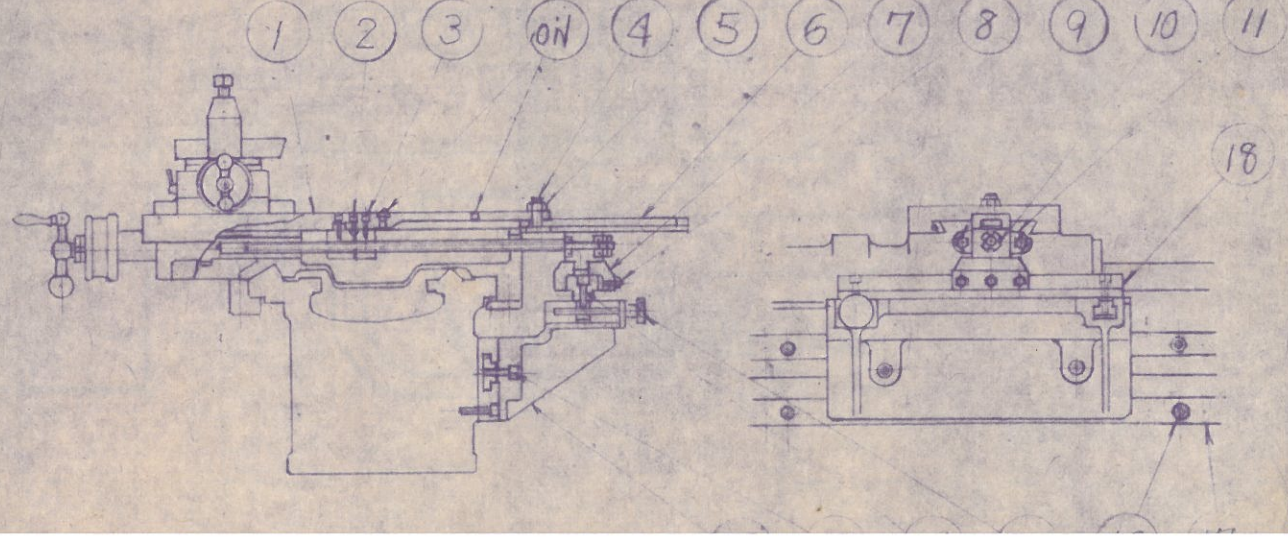

(8) HOW TO HANDLE SLIPPING CLUTCH

In machining with feed, this clutch works to stop rotation of the feed shaft by means of slipping when load is over or when saddle and cross slide get to the stoppers.

When the feed shaft does not stop even the saddle reaches various stoppers, or when the feed shaft slips on the ordinary road; nut mounted on the clutch should be adjusted in order to let it work correctly.

Having turned the adjusting nut to the right, spring pressure would increase, which would make it hardly slip. While, when the adjusting nut is turned to the left, spring pressure would grow weak, which could stop rotation of the feed shaft without necessity of large force.

Be sure not to screw the adjusting nut exceedingly.

Setting torque of the nut should be controlled at the minimum.

Do not supply oil because of dry clutch, which needs no oil.

Be careful for the saddle not to overrun or clash in thread cutting operation, where there is no safety stopping devices.

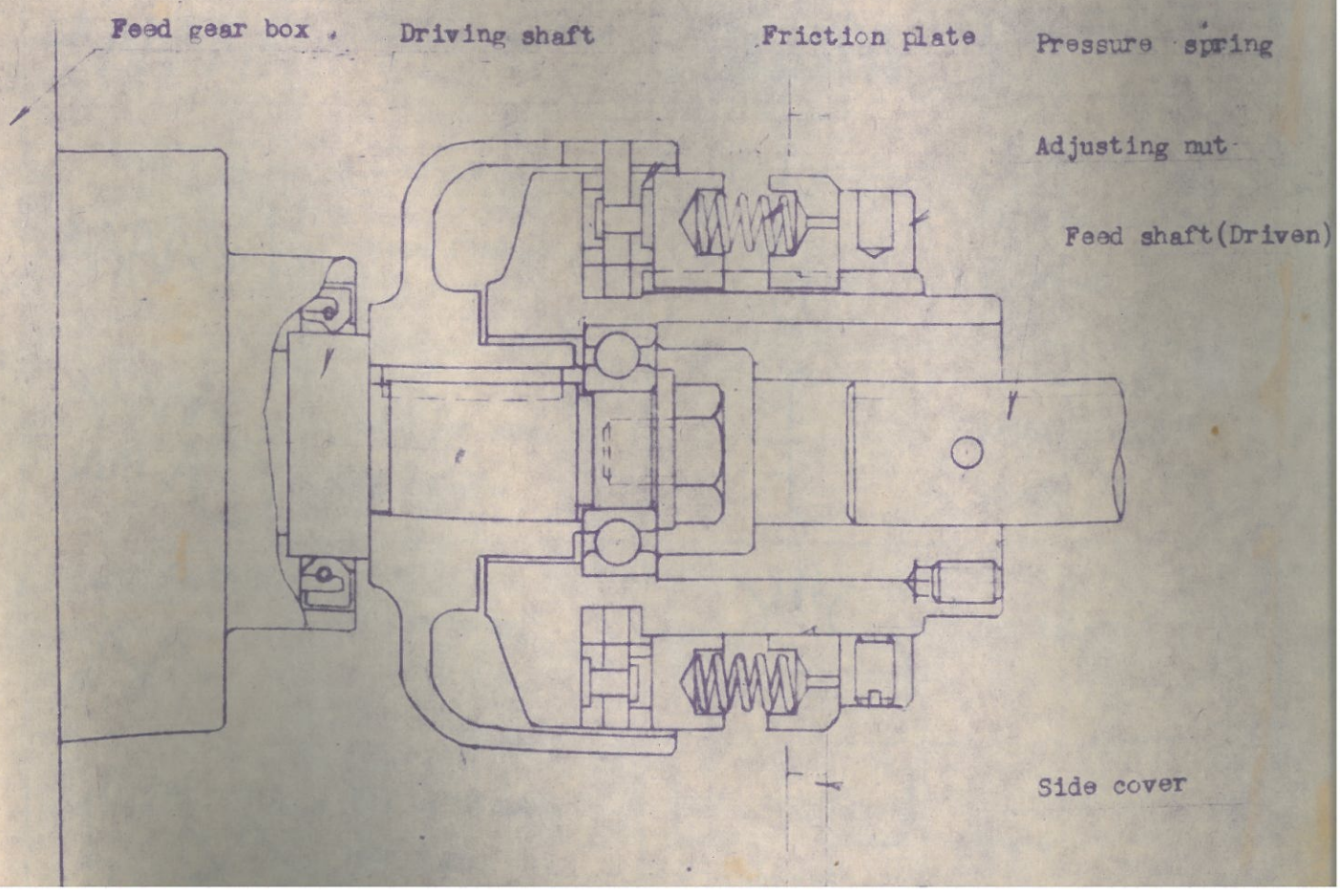

DESCRIPTION OF SYMBOLS ON INDICATE-PLATE

Symbol	Description	Symbol	Description
/min	R.P.M. of spindle		Threading
	High speed range		Do not handles in motion
	Low speed range		Feed stop
	Feed		Neutral position
	Longitudinal feed		Half-nut engage
	Cross feed		Friction clutch disengage
mm /	Feed per rev. of spindle		Friction clutch engage
mm	Pitch in mm.		Oil inlet
1" /	No. of threads per inch		Drain